RCF 370 & 500

NAM : NAME PLATE
DIR : DIRECTION TAG
INS : INSTRUCTION TAG
561 : POP RIVETS

TYPE	A	E
RCF370	28-1/2"	10-1/2"
RCF500	31-1/2"	13-1/2"

SIDE MOUNT MODEL SHOWN
AVAILABLE IN CLOCKWISE R.H
OR COUNTRCLOCKWISE L.H

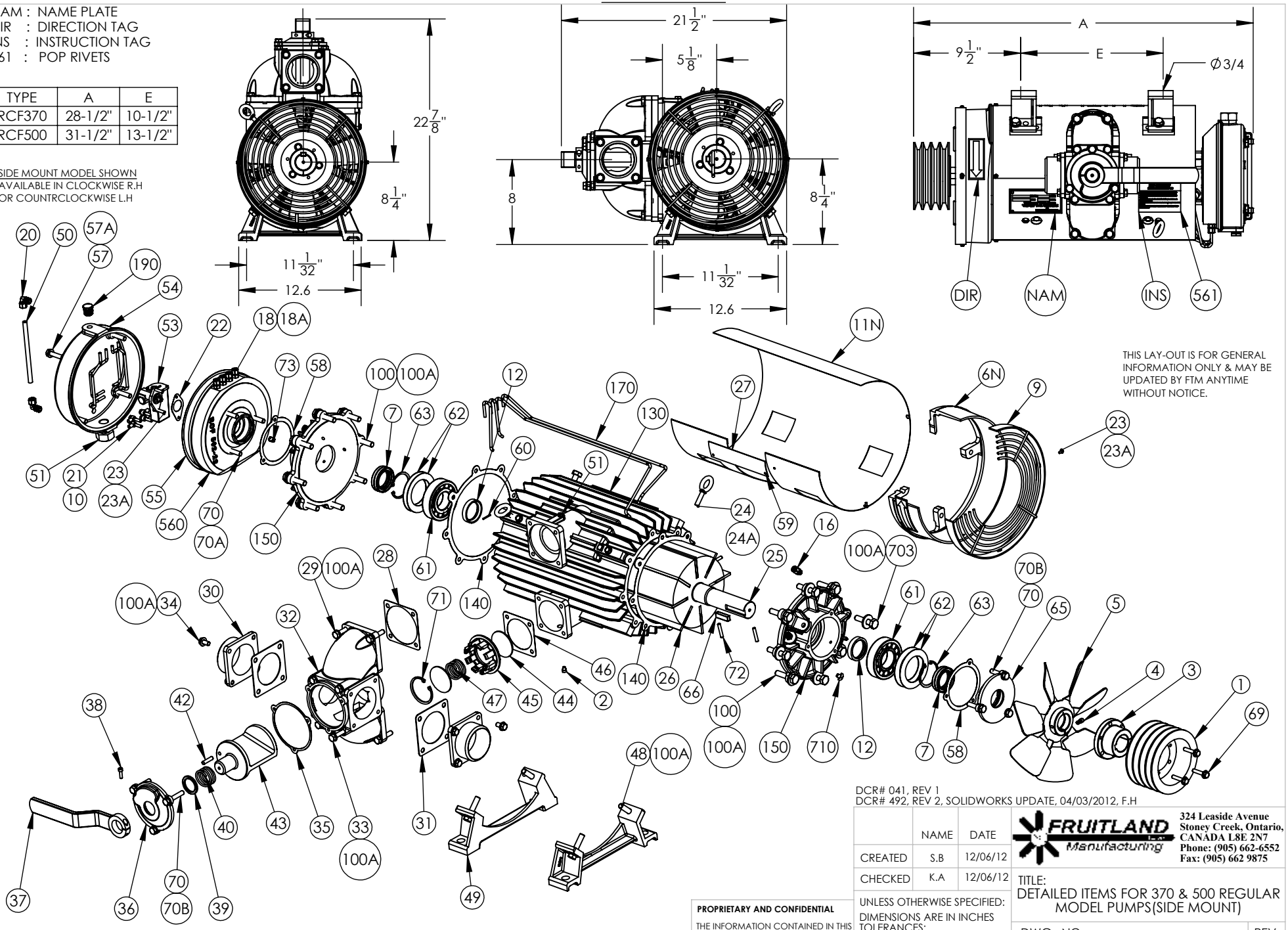

THIS LAY-OUT IS FOR GENERAL INFORMATION ONLY & MAY BE UPDATED BY FTM ANYTIME WITHOUT NOTICE.

IMPORTANT : WHEN ORDERING SPARE PARTS AND ALWAYS STATE MODEL AND SERIAL NUMEBR OF PUMP.

REDRAWN AND SCANNED ON COMPUTER FEB 18/97
REVISED SEP 27/99

PROPRIETARY AND CONFIDENTIAL

THE INFORMATION CONTAINED IN THIS DRAWING IS THE SOLE PROPERTY OF **FRUITLAND MANUFACTURING.** ANY REPRODUCTION IN PART OR AS A WHOLE WITHOUT THE WRITTEN PERMISSION OF FRUITLAND MFG. IS PROHIBITED.

DCR# 041, REV 1
DCR# 492, REV 2, SOLIDWORKS UPDATE, 04/03/2012, F.H

	NAME	DATE
CREATED	S.B	12/06/12
CHECKED	K.A	12/06/12

FRUITLAND Manufacturing
324 Leaside Avenue
Stoney Creek, Ontario,
CANADA L8E 2N7
Phone: (905) 662-6552
Fax: (905) 662 9875

UNLESS OTHERWISE SPECIFIED:
DIMENSIONS ARE IN INCHES
TOLERANCES:
FRACTIONAL OR .X = ±.015
.XX = ±.010
.XXX = ±.005

TITLE:
DETAILED ITEMS FOR 370 & 500 REGULAR MODEL PUMPS(SIDE MOUNT)

DWG. NO. RCF 370-78
RCF 500-78

REV 2

MATERIAL --

SCALE: 1:48 | WEIGHT:-- | SHEET 1 OF 1

5 4 3 2 1